DT 4

DIVE THRUSTERS

POWERED BY NORTHERN DIVER INTERNATIONAL LTD | + 44 (0) 1257 25 44 44

MANUFACTURED IN THE UK

1 CONTROLLER UNIT

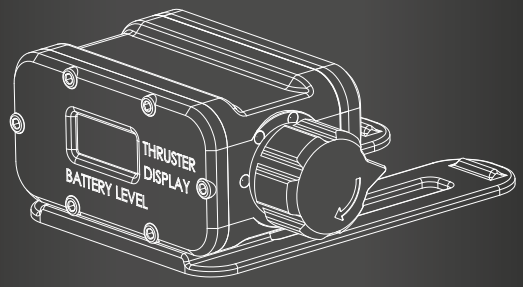

Covert Mode Available - OLED Display
Variable Speed Control - Displays Battery Level

2 BATTERY HOUSING

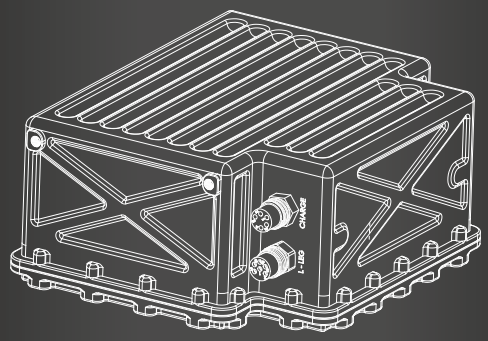

Belt/Harness Compatible - Anodised Aluminium Casing - Lithium Ion Battery - Lightweight Design

3 THRUSTER UNIT

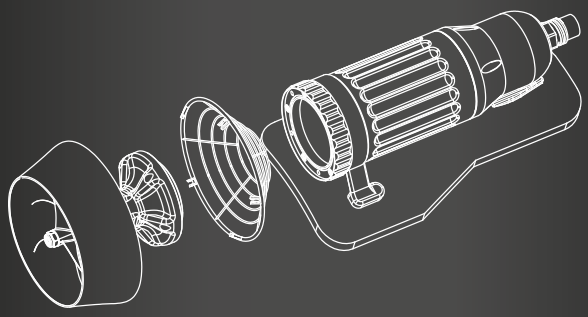

Magnetic Coupling Drive
Aluminium Propellers - Reduced Noise

ALL ASSEMBLIES

100M

DEPTH RATED

AUTOMATIC
SHUT DOWN FUNCTION

A state-of-the-art wearable system offering military operators the advantage of battery powered underwater propulsion to enhance performance and reduce fatigue during missions.

The Northern Diver DT4 Thrusters are a personal underwater propulsion system designed for Military combat swimmers.

Developed and manufactured in the U.K. by Northern Diver, our DT4 Thrusters are at the forefront of innovation. They offer hands free propulsion, via the latest technology, unrivalled construction and expert engineering, to effectively enhance performance and reduce fatigue during tasks, revolutionising combat swimming, reconnaissance tasks, search & rescue operations and inspection works.

Photos shown wearing the harness option. A belt system is also available.

NSN
4220-99-847-5487

Scan the QR to learn more about this product.

www.ndiver-military.com/diver-thrusters

CONTROLLER & THRUSTER OVERVIEW

Controller

01	Battery Power Display	07	Magnetic Coupling
02	Controller Power Port	08	Weight Reducing Body Design
03	Adjustable Speed Dial	09	Sealed Motor
04	Mounting Bracket	10	Thruster Power Port
05	Marine Stainless Steel Fittings	11	Bracket Attachments
06	Corrosive Resistant Aluminium Propellers	12	Protective Guard

www.ndiver-military.com/diver-thrusters

TECHNICAL SPECIFICATIONS

Depth rating: 100m (328')

Top speed:
3.0mph - 4.8kph (2.6kts)
2.8mph - 4.5kph (2.4kts) - towing a diver

Max operating range: 4.4NM

Run time at:
100% - 100 mins
50% - 240 mins
25% - 420 mins

Speed:
Variable speeds up to 3.0mph - 4.8kph (2.6kts) as standard, with maximum speeds of up to 4.0mph - 6.44kph (3.5kts) achievable.

Speed and thrust can be customised to meet user requirements

Manually controlled

Thrust/propulsion: 22.5kg (50lbs)

Battery:
Input: 25.9V 20A
Output: 29.4V 50A
Capacity – 42Ah
Typical charge time:
5.5hrs (330mins) - flat to full charge
Weight: 8.2kg (18.1lbs)
Type – lithium ion battery with gas vent

Full system weight:
Harness: 14.6kg (32.2lbs) - dry
5kg (11lbs) - wet

Belt: 14.3kg (31.5lbs) - dry
4kg (8.8lbs) - wet

Thruster unit:
Weight: 2.1kg (4.6lbs) - each
Dims: 310*115mm (12.2*4.5")

Controller unit:
Weight: 0.4kg (0.9lbs)
Dims: 50*80*41mm (2*3.1*1.6")

Cable weight: 0.4kg (0.9lbs)

Harness weights: 1.4kg (3.1lbs)

Belt weight: 1.2kg (2.6lbs)

Carry case dimensions:
851*556*429mm (33.5*21.9*16.9")
System packed weight: 30kg (66lbs)

Software:
Written in house and can be customised to specific customer requirements

Specific speed performance is influenced by operator weight and equipment load.

The stated speeds were recorded using minimal gear: wetsuit, snorkel, fins, and without cylinders.

PERFORMANCE

Both speed and thrust are configurable to suit specific user requirements.

Through the application of hydrodynamics and intensive research with the University of Lancaster, Northern Diver have optimised the DT4 Thrusters for maximum efficiency and power, ensuring they perform to their full potential.

The propellers are driven by an innovative magnetic coupling which allows the contactless transfer of torque from the sealed motor, increasing the life cycle of the thrusters and reducing servicing intervals.

The state-of-the-art motors and drive components produce impressive thrust at 22.5Kg (50lbs). Hydroacoustic frequencies are reduced as the drive components are machined to precise tolerances ensuring concentricity throughout providing stealth for covert operations.

Durability is further enhanced by constructing the propellers from aluminium billet, unlike other systems on the market, and anodising for corrosive resistance,
This upgrade allows the thrusters to be used in a variety of new applications and is exclusive and unique to Northern Diver.

The DT4 propeller provides high performance with optimum pitch and a number of blades. It was developed with U.K. Universities specialising in fluid dynamics.

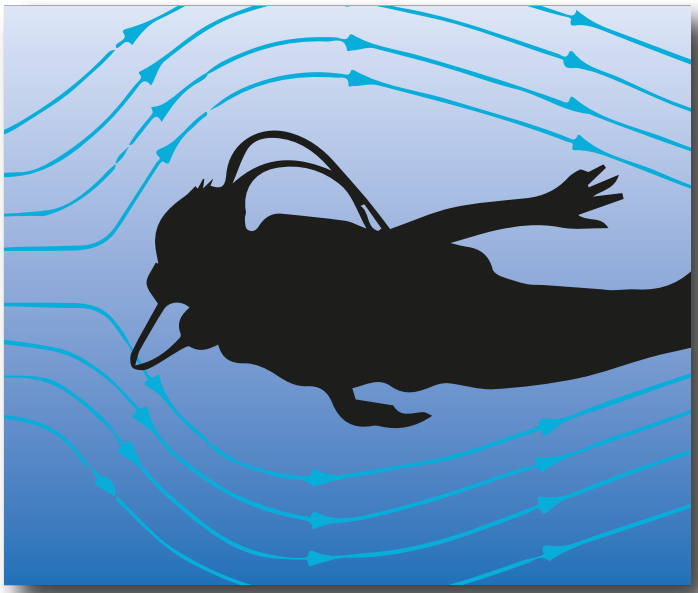

We are constantly working to ensure the user's kit will provide the best streamlined profile underwater, to reduce drag and increase the speed of our DT4 Dive Thrusters.

The development of a sleek battery cover and ensuring the battery housing harness remains as low profile as possible, will further enhance performance.

The Battery pack uses high capacity Lithium-Ion cells and an advanced battery management system with built in protection. The power driving circuitry delivers maximum power when required as the internal components are thermally cooled by the ribbed case design, the cooling veins provide surface area extracting heat from the battery extending the reliability, duration and life. Additional auxiliary batteries can be plugged in to increase performance.

DUAL BATTERY CONFIGURATION

For extended endurance during demanding underwater operations, two dive thruster batteries can be seamlessly linked to provide significantly longer durations.

The dual battery configuration is designed to deliver up to 200 minutes of operational time, a top speed of 4.8kph (2.6kts), and a maximum range of 15 km. The dual system weighs 22.6kg (49.8lbs) dry. To securely integrate both batteries, a robust dual harness is supplied, ensuring a stable and ergonomic fit on the diver's back.

Electronic connection between the batteries is achieved using a durable 5-pin cable,engineered for reliability in harsh underwater environments.

This configuration offers divers enhanced performance and extended operational capability, meeting the rigorous demands of military and professional underwater missions.

Available upon request, speak to our military sales team to discuss your requirements.

ERGONOMICS

The various user groups applications have been considered when designing and configuring the thrusters harness systems. The equipment has been refined for seamless integration with the user's standard kit.

The thrusters include two choices of harness and belt for wearing the kit, that is interchangeable.

TACTICAL HARNESS

Improves comfort, practicality, and usability, the controller can be configured to right or left.

TACTICAL BELT

A lightweight belt with removable shoulder straps to further improve integration with fully kitted operators.

The tactical harness is available in S/M and L/XL sizes and the tactical belt is available in one adjustable size to cater to a wide range of combat swimmers body types. In both configurations the battery pack is protected and securely housed against the swimmer's lower back.

To further optimise the swimmer's experience and reduce fatigue on long tasks, Northern Diver's Engineering department have applied weight reduction techniques to all assemblies within the set. The reduced weight also improves performance without compromising quality. The thrusters also feature an automatic shut-down function, providing an additional layer of safety during operation.

The dry weight of the kit is:
Harness system 14.6kg & Belt system 14.3kg.

The interface between the swimmer and the DT4 Dive Thrusters is seamless thanks to the Control Module featuring an OLED screen displaying battery life. The control knob offers the operator variable speed settings with a staged mechanism to allow the user optimum performance, task dependant.

Speed settings can be matched or planned before a dive, and adjustments can be easily made and communicated with other users. The controller can be mounted on the belt, the shoulder or standard MOLLE.

In addition to the manual control provided, the DT4 Thrusters have the capability to be remotely operated with Northern Diver's NIMROD underwater navigation system. This enables the user to alter their speed without removing his hand from the navigation equipment giving complete control, whilst maintaining a smooth underwater profile. NIMROD console with DVL makes your mission fully covert.

Did you buy another manufacturer's thrusters?
Northern Divers NIMROD underwater navigation system can control your thrusters wirelessly with the addition of a compact adaptor which is easily fitted. Contact us to discuss.

UNDERWATER PERSONAL PROPULSION

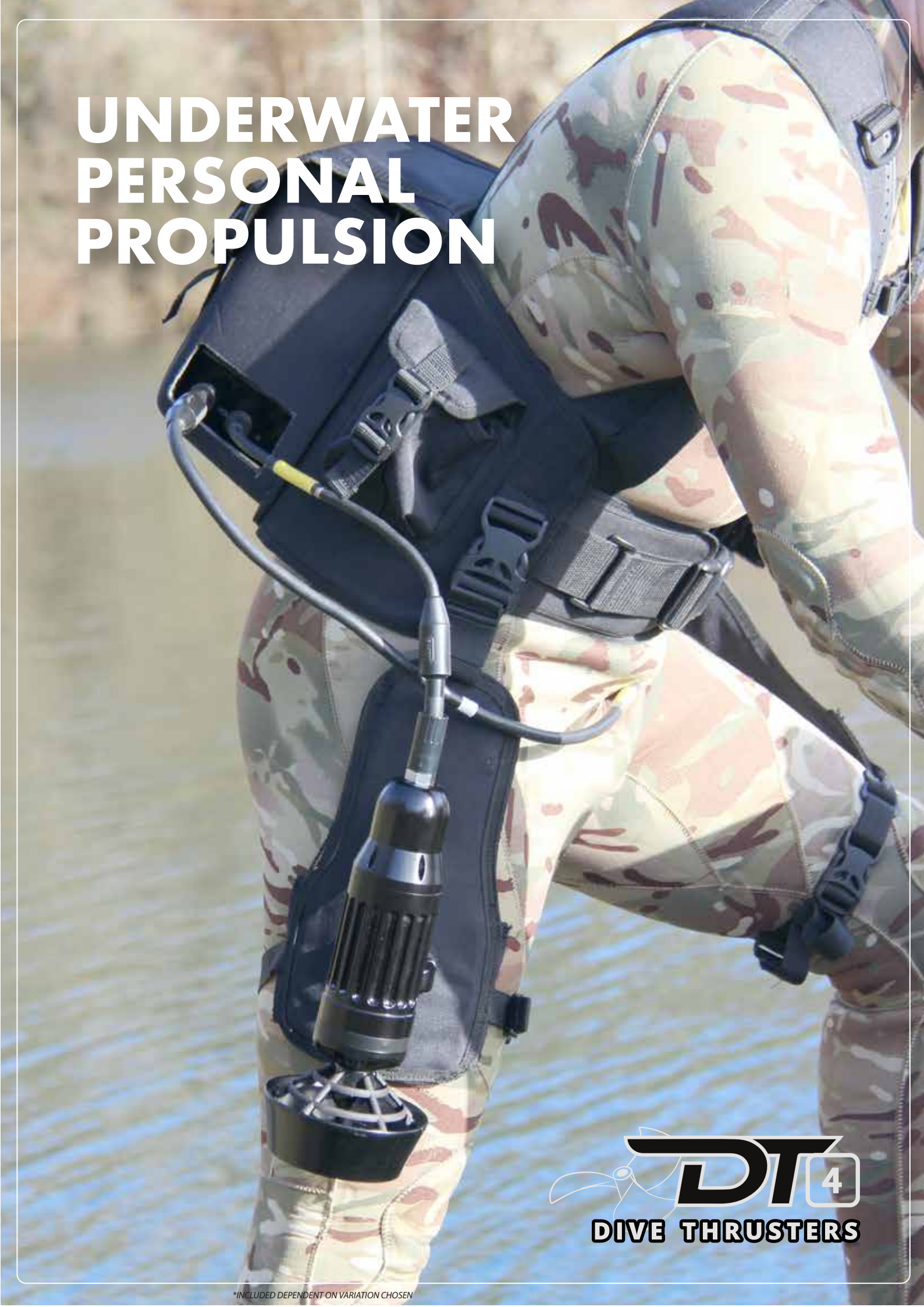

DT4
DIVE THRUSTERS

*INCLUDED DEPENDENT ON VARIATION CHOSEN

www.ndiver-military.com/diver-thrusters

DT4 DIVE THRUSTER SYSTEM CONTENTS

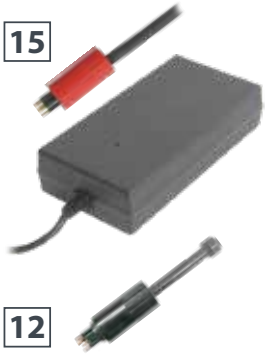

ITEM	PART NUMBER	DESCRIPTION	QTY
01	ND0001585	USER MANUAL	1
02	ND0003379	CERTIFICATION PACK	1
03	ND0003101	SPARES PARTS KIT	1
04	ND0003102	CONTROLLER UNIT	1
05	ND0003103	LEFT THRUSTER (CCW) UNIT	1
06	ND0003104	RIGHT THRUSTER (CW) UNIT	1
07	ND0003105	BATTERY HOUSING	1
08	ND0003106/ND0003107	TACTICAL HARNESS (S/M OR L/XL)*	1
09	ND0003380	BATTERY NEOPRENE COVER*	1
10	ND0003124	6 PIN THRUSTER CABLE	2
11	ND0003125	8 PIN CONTROLLER CABLE	1
12	ND0003137	5 PIN CHARGING PORT BLANK	1
13	ND0003233	BATTERY BELT BRACKETS	2
14	ND0003359	TACTICAL BELT (ONE SIZE)*	1
15	ND0003367	5 PIN CHARGER	1
16	ND0003076	TRANSPORTATION CASE	1

DT4 MAINTENANCE

To ensure the long life of your DT4 dive thruster kit we offer cleaning kits, maintenance kits and the option to purchase spare parts.

Maintenance Kits

The kit features the basic items required to maintain the operation of your DT4 dive thrusters and includes a small waterproof hard case for easy transport

Each kit includes:

> 1 x 2.5mm allen key
> 1 x 3.0mm allen key
> 1 x 10mm spanner
> 1 x left aluminium propeller kit
> 1 x right aluminium propeller kit
> 1 x storage case
> 1 x Molykote 44 silicone grease

Cleaning Kit

Protects, lubricates, and maintains the best signal quality of the thruster connector cable pins. Consistant maintenance of the cable pins helps reduce intermittent connections, arcing, RFI, wear and abrasion and provides long-lasting protection from oxidation on the plated surface.

Each kit includes:

> 1 microfiber cleanng cloth
> 1 x swab pack (3.5*10.7mm)
> 1 x cleaning solution (100ml)
> 1 x storage case

DT4 SPARE PARTS

ALL components that make up the Northern Diver DT4 Dive Thruster System can be bought as a seperate part if required.

Each component is easy to order through your Northern Diver sales representative and available for quick delivery in most cases.

Contact us to discuss your requirements.

NORTHERN DIVER
MINE WARFARE & MILITARY DIVING SPECIALISTS

OFFICES

Northern Diver International Ltd.
East Quarry
Appley Lane North
Appley Bridge
Lancashire,
WN6 9AE
UK

CONTACT DETAILS

Mel Simm
Military Sales Director
Office: +44 (0) 1257 25 69 36
Mobile: +44 (0) 7877 693 876
Email: mel@ndiver.com

Neil Tordoff
Commercial Sales Director
Office: +44 (0) 1257 25 69 49
Mobile: +44 (0) 7972 061 533
Email: neil@ndiver.com

VISIT

www.ndiver-military.com

Version No. 06102026 (Northern Diver Use)